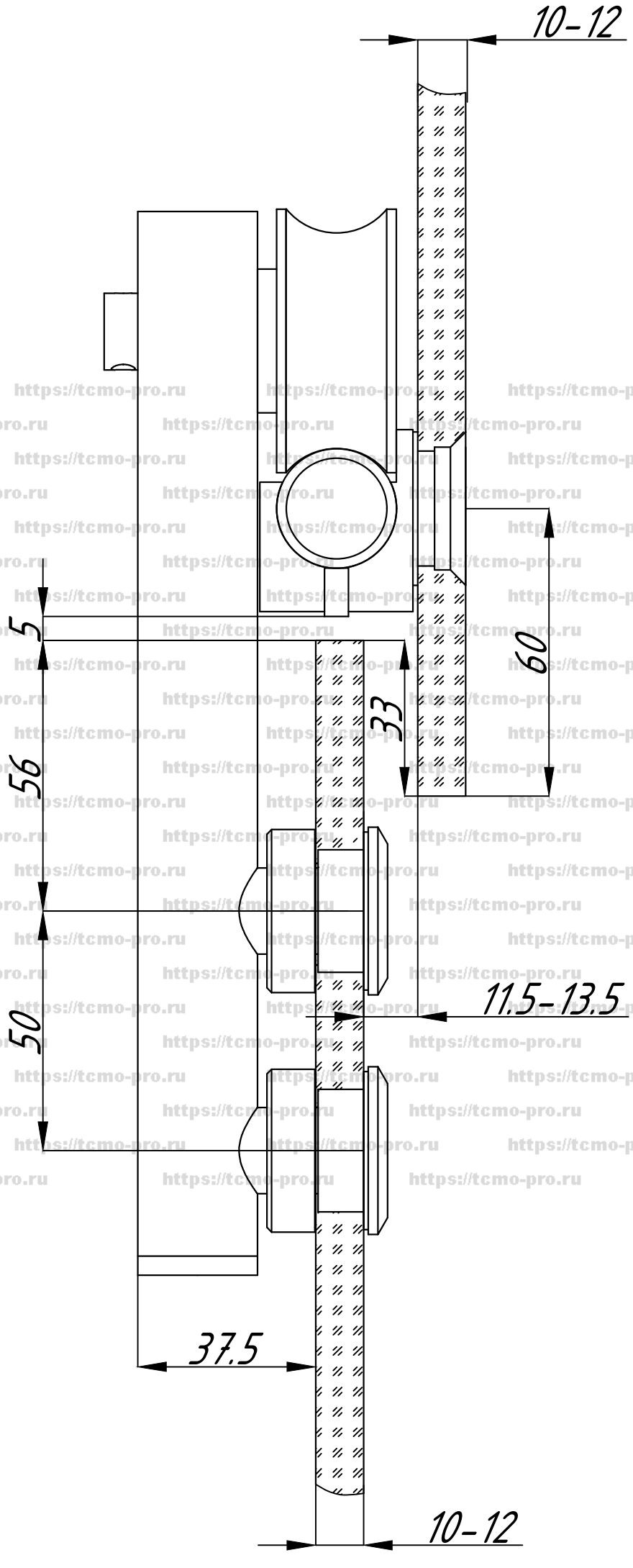
10-12
5
56
50
33
60
11.5-13.5
37.5
10-12